York

6 ¾ x 5 Reciprocating Compressor

Parts Manual

Compliments Of

CENTRAL ICE MACHINE COMPANY, INC.
Refrigeration Supplies
800-228-7213 www.centralice.com

CENTRAL ICE MACHINE COMPANY

Refrigeration Supplies

6279 S. 118TH STREET ■ OMAHA, NEBRASKA 68137
402-731-4690 ■ 800-228-7213 ■ FAX 402-731-0823

WE CAN SUPPLY ALL YOUR REFRIGERATION NEEDS AND PARTS FOR USE IN THE FOLLOWING...

COMPRESSORS: York - Frick - Vilter - Fuller - Mycom - Sullair - FES - Howe - Crepaco - Grasso - Sabroe - Kobe - Dunham Bush - Stal - Howden

CONTROL VALVES: Refrigerating Specialties - Hansen - Phillips - Hubbell - Alco - Sporlan - Grasso - Danfoss

HAND VALVES: Refrigerating Specialties - Hansen - Herl - Frick - Henry - Shank - Grasso - Danvalve

RELIEF VALVES: Henry - Refrigerating Specialties - Hansen - Shank - Rego

CONDENSERS AND EVAPORATORS: Evapco - Frick - Imeco - Frigid Coil - Krack - Baltimore Air Coil - Vilter - Gebhardt - King

GAUGES: Marsh - Ashcroft - Danton - Duro - McDaniel - Wika

REFRIGERATION CONTROLS: Penn - Mercoid - Honeywell - Barber Coleman - Johnson Controls

REFRIGERATION PUMPS: Cornell - Viking - York IT - Blackmere - Hansen

PURGERS: Hansen - Refrigerating Specialties - Armstrong

MISCELLANEOUS: X-Pando Pipe Joint Compound - MSA Gas Masks - Sulphur Sticks for Ammonia Leak Detection - Litmus Paper - Coalescer Filter Elements

LOW PRICES – HUGE INVENTORY
KNOWLEDGEABLE SALES PEOPLE

YORK®

COMPRESSOR UNITS
6¾" x 5" SINGLE STAGE

RENEWAL PARTS | Supersedes: Form 255.10-RP (1168) | 474 | Form 255.10-RP

DIRECT AND V-BELT DRIVE—Y-49 AND Y-57 SERIES
REFRIGERANT-717 (ALSO R-12 and R-22)

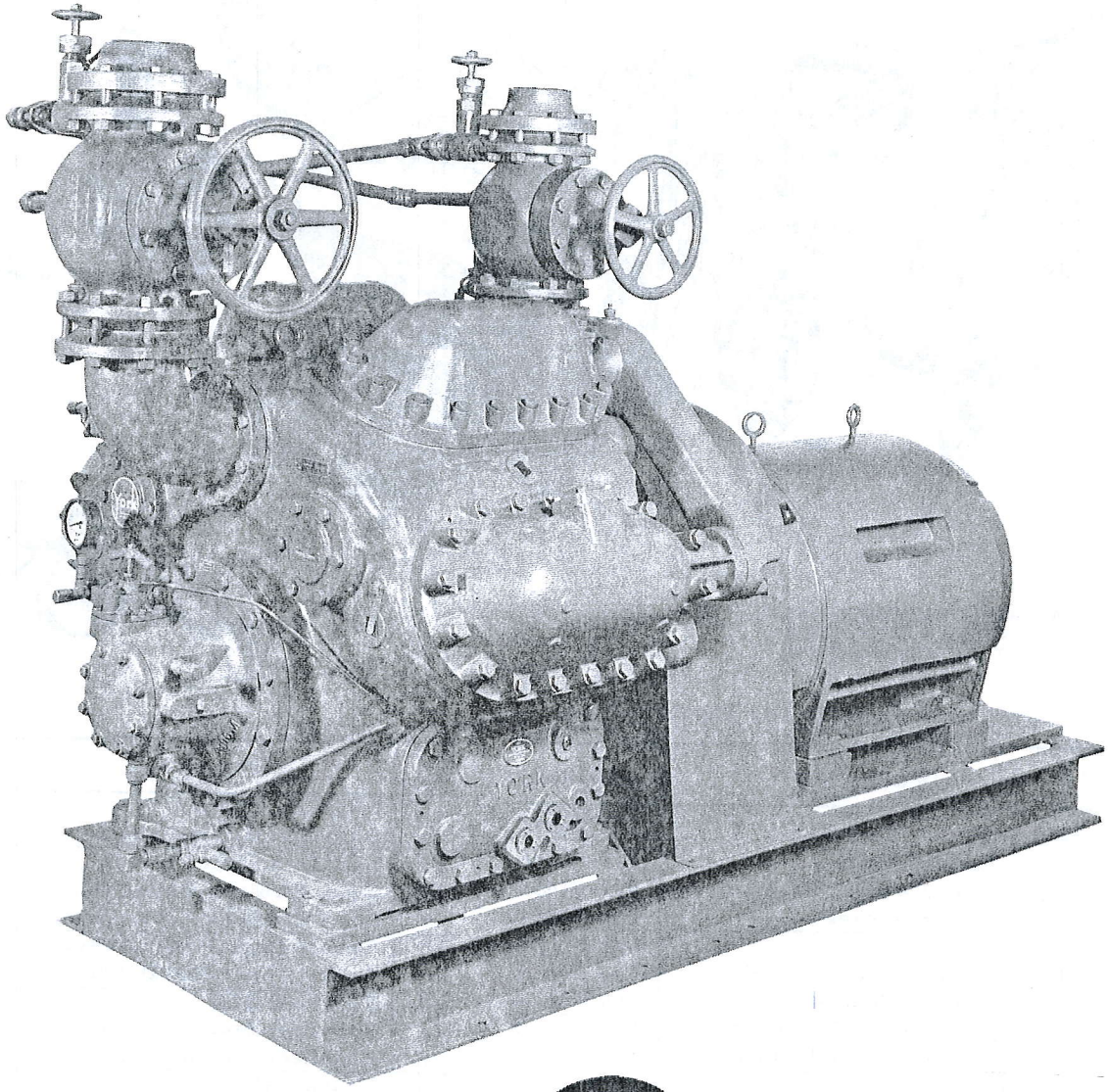

CENTRAL ICE MACHINE COMPANY
Refrigeration Supplies
402-731-4690 800-228-7213 FAX 402-731-0823
customerservice@centralice.com

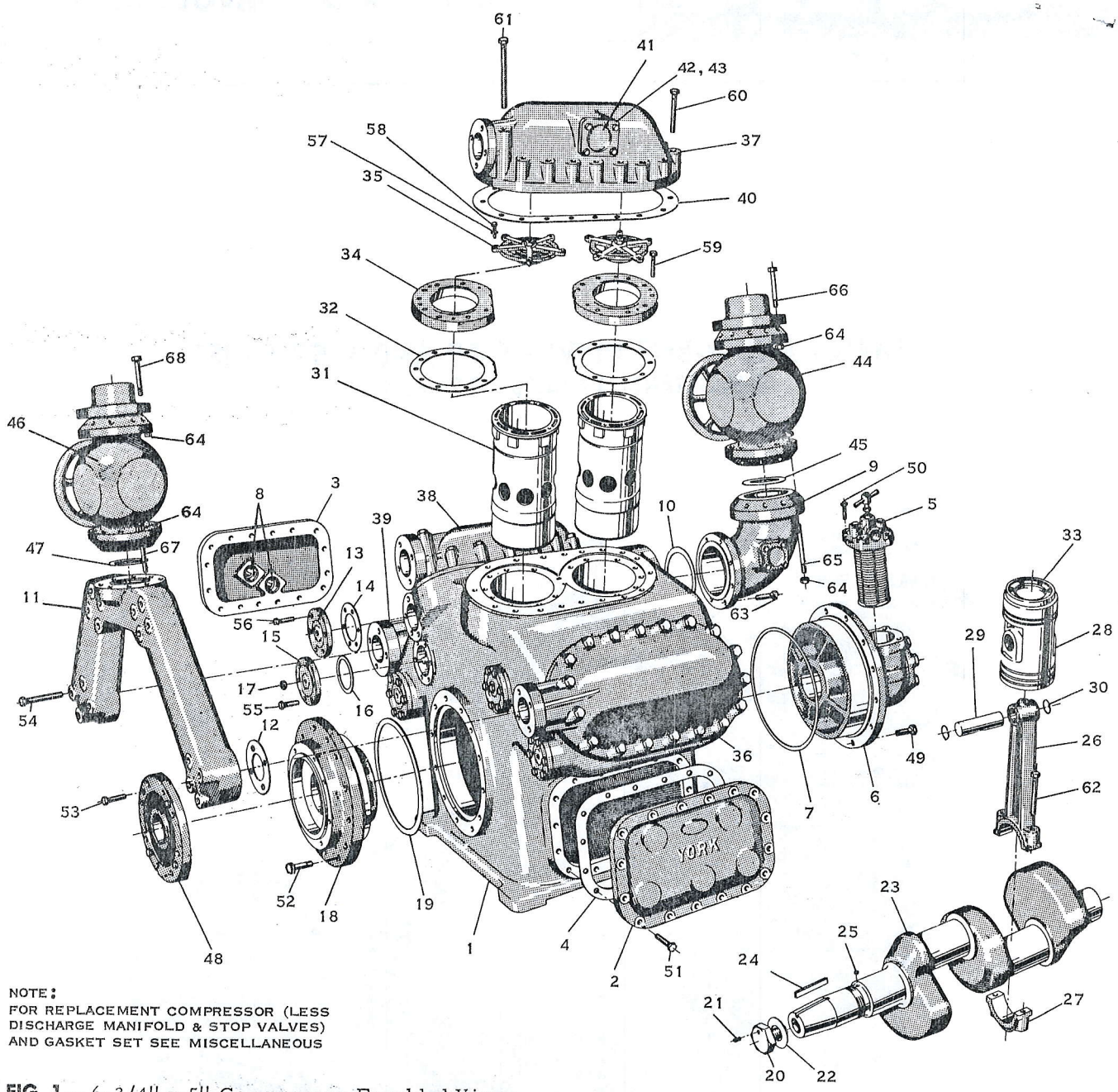

NOTE:
FOR REPLACEMENT COMPRESSOR (LESS DISCHARGE MANIFOLD & STOP VALVES) AND GASKET SET SEE MISCELLANEOUS

FIG. 1— 6-3/4" x 5" Compressor Expolded View

Item No.	Description	Part No.
1	Housing	364-01241 -002
2	H.H. Cover, Plain	064-01256
3	H.H. Cover - Sight Glass	064-01455
4	H.H. Cover Gasket	070-02541
5	Oil Filter	See Fig. 2
6	Brg. Head, Oil Pump End	See Fig. 2
7	Bearing Head Gasket	See Fig. 2
8	Oil Sight Glass - Flat Type	See Fig. 8
	Oil Sight Glass - Bulb Type	See Fig. 9
9	Suction Elbow 5"	064-01962
	Suction Elbow 6"	064-01963
10	Suction Elbow Gasket	028-00814
11	Discharge Manifold	364-01339
12	Discharge Manifold Gasket	070-04786

Item No.	Description	Part. No.
13	Unloader Cover	064-01299
14	Unloader Cover Gasket	070-04787
15	Suction Strainer Cover	See Fig.11
16	Suct. Strainer Cover Gasket	See Fig.11
17	Suct. Strainer Cover Nut	See Fig.11
18	Thrust Brg. - Seal Assy.	See Fig. 4
19	Gasket, Seal End Bearing	See Fig. 4
20	Flywheel Bolt	064-01262
21	Flywheel Bolt Set Screw	021-00784
22	Flywheel Bolt Washer	064-01263
23	Crankshaft	364-01259
24	Crankshaft Key	064-01261
25	Seal Collar Ball	See Fig. 4
26	Connecting Rod	See Fig. 5
27	Bearing Cap	See Fig. 5

6 3/4" X 5" Compressor

Item No.	Description	Part No.
28	Piston	See Fig. 5
29	Piston Pin	See Fig. 5
30	Locking Spring	See Fig. 5
31	Cylinder Sleeve	See Fig.10
32	Valve Plate Gasket	See Fig. 7
33	Suction Valve	See Fig. 5
34	Valve Plate	See Fig. 7
35	Discharge Valve	See Fig. 7
36	Head, Compr. (Cly. 1 & 2)	064-01252
37	Head, Compr. (Cly. 3 & 4)	064-01253
38	Head, Compr. (Cly. 5 & 6)	064-01254
39	Head, Compr. (Cly. 7 & 8)	064-01255
40	Gasket, Head, Plain	070-04790
	Gasket, Head, Relief Valve	070-04789
41	Relief Valve	468-09340
42	Cover, Relief Valve	064-01323
43	Gasket, Relief Valve Cover	070-04788
44	Suction Stop Valve 5"	368-00304
	Suction Stop Valve 6"	368-00305
45	Suct. Stop Valve Gasket 5"	028-00551
	Suct. Stop Valve Gasket 6"	028-00882
46	Discharge Stop Valve	068-00304
47	Gasket, Discharge Stop Valve	028-00551

Item No.	Description	Part No.
48	Shaft Seal Cover Plate	See Fig. 4
49	Cap Screw - Bearing Head	See Fig. 2
50	Cap Screw - Oil Filter	See Fig. 2
51	Cap Screw - Hand Hole Cover	021-01661
52	Cap Screw - Bearing Head	See Fig. 4
53	Cap Screw - Cover Plate	See Fig. 4
54	Cap Screw - Discharge Manifold	021-02764
55	Cap Screw - Suction Strainer	See Fig.11
56	Cap Screw - Unloader Cover	021-01541
57	Lockwasher	See Fig. 7
58	Cap Screw - Valve Cage	See Fig. 7
59	Cap Screw - Valve Plate	See Fig. 7
60	Head Cap Screw - Short	021-12195
61	Head Cap Screw - Long	021-08788
62	Bolt - Connecting Rod	See Fig. 5
63	Cap Screw, Suction Elbow	021-01638
64	Nut, Hex 3/4	021-00504
65	Stud (5" Suction Valve)	070-00146
	Stud (6" Suction Valve)	070-12779
66	Cap Screw 3/4 x 4-1/4	021-10461
67	Stud, Discharge Stop Valve	070-00059
68	Cap Screw 3/4 x 4	021-02769

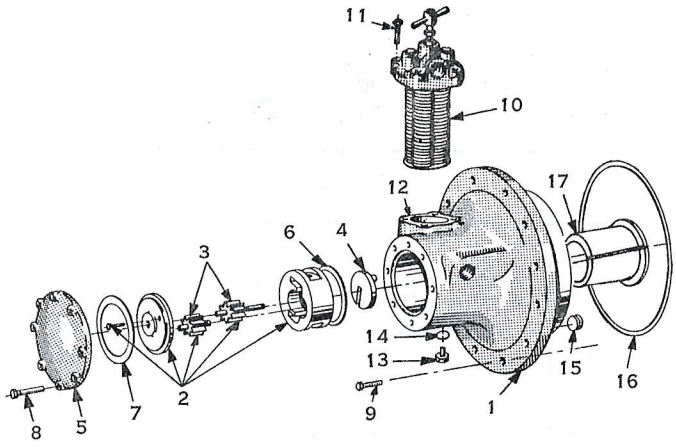

FIG. 2— Bearing Head and Oil Pump

Item No.	Description	Part No.
1	Bearing Head	364-01248
2	Oil Pump Assy. (Includes item 3)	364-01265
3*	Shaft and Gear kit	364-03670
4	Crank	364-01268
5	Cover Plate	064-01270
6	Gasket	028-01608
7	Gasket	028-01607
8	Cap Screw (8-Req'd)	021-01583
9	Cap Screw (12-Req'd)	021-01661
10	Oil Filter Assembly	026-01689
11	Cap Screw (4-Req'd)	021-01567
12	Gasket, Oil Filter	028-00868
13	Plug, Drain	064-01454
14	Gasket, Drain Plug	028-01159
15	Plug, Pipe	023-04298
16	Gasket	070-02720
17	Bearing, Main (2 Pieces)	364-01271
	Oil Pump Kit (Items 2, 4, 6, & 7)	364-05055

* Item 3 available only as a kit

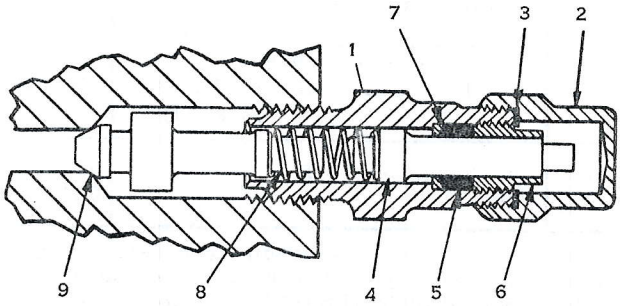

FIG. 3— Oil Pressure Regulating Valve

Item No.	Description	Part No.
	Valve Assembly (Items 1-9)	364-01448
1	Valve Body	064-01447
2	Cap, Valve	068-07842
3	Gasket	028-03014
4	Valve, stem	022-00378
5	Packing, Valve Stem	028-01060
6	Nut, Packing	068-07843
7	Washer, Packing	068-07841
8	Spring, Helical	029-00238
9	Plunger	064-01449

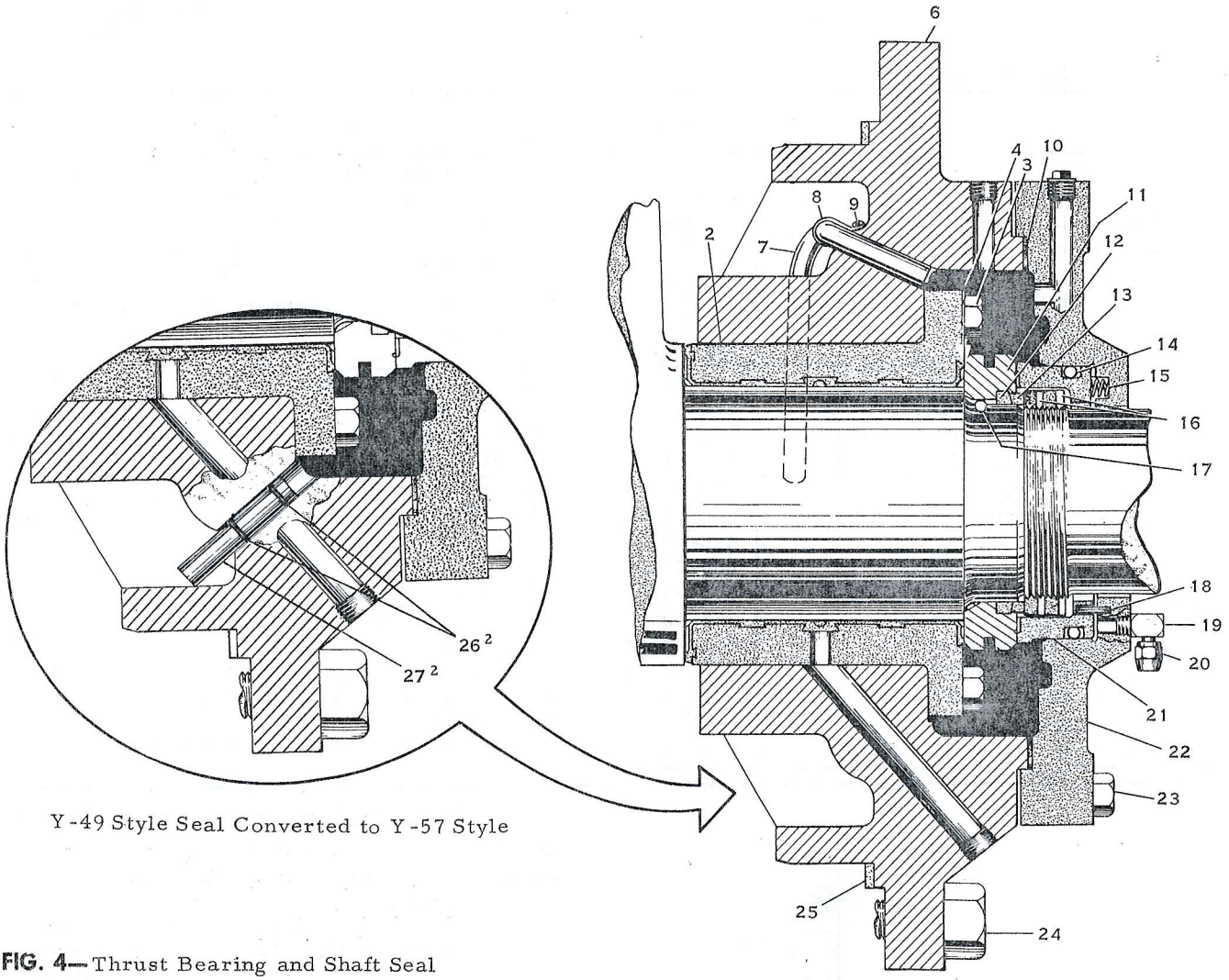

FIG. 4—Thrust Bearing and Shaft Seal

Item No.	Description	Part No.
1	Bearing Head Assy. Complete (Items 2-9)	364-01250
2	Bearing, Main Thrust	364-01274
3	Cap Screw (6 Req'd)	021-09592
4	Lockwasher (6 Req'd)	021-05249
5	Head Brg. Ass'y (Items 6-9)	364-01251
6	Head	064-01251 -001
7	Oil Line	064-08401
8	Clamp	064-02626
9	Screw	021-01781
10	Cover Plate Gasket	070-14921
11	Shaft Seal Collar	064-08413
12	Shaft Seal Packing	028-01610
13	Shaft Seal Packing Ring	064-01278
14	"O" Ring (Ammonia-Blue Dot) "O" Ring (Halocarbon - Red Dot)	028-03796 028-04401
15	Helical Spring (16-Req'd)	029-04010
16	Shaft Seal Collar Nut (2-Req'd)	064-01260
17	Locking Ball	029-01845
18	Roll Pin	029-03990

Item No.	Description	Part No.
19	Elbow	023-01285
20	Flare Nut	021-05675
21	Shaft Seal Ring	064-08326
22	Cover Plate	064-08327
23	Cap Screw (8-Req'd)	021-08373
24	Cap Screw (12-Req'd)	021-01661
25	Gasket	070-02720
	Kit,[1] shaft seal conversion - ammonia	064-08883
	Kit,[1] shaft seal conversion - halocarbon	064-12543
	Kit,[1] shaft seal repair - ammonia (Items 11, 12, 14, 17 & 21)	064-12545
	Kit,[1] shaft seal repair - halocarbon (Items 11, 12, 14, 17 & 21)	064-12544
26	"O" Ring (2-Req'd)	028-02832
27	Plug	064-12693

[1] Shaft Seal Conversion Kit includes all material required to convert Y-49 diaphragm type seal assembly to present Y-57 design. Shaft Seal Repair Kit includes all material required to repair present Y-57 style seal or seal previously field converted to Y-57 style. (See DESIGN HISTORY section of Service Instruction - Form 255.10-NM.)

[2] Items 26 & 27 are part of Shaft Seal Conversion Kit. If after conversion, shaft seal cavity does not remain flooded with oil during shutdown replace "O" rings, item 26. (2-Req'd)

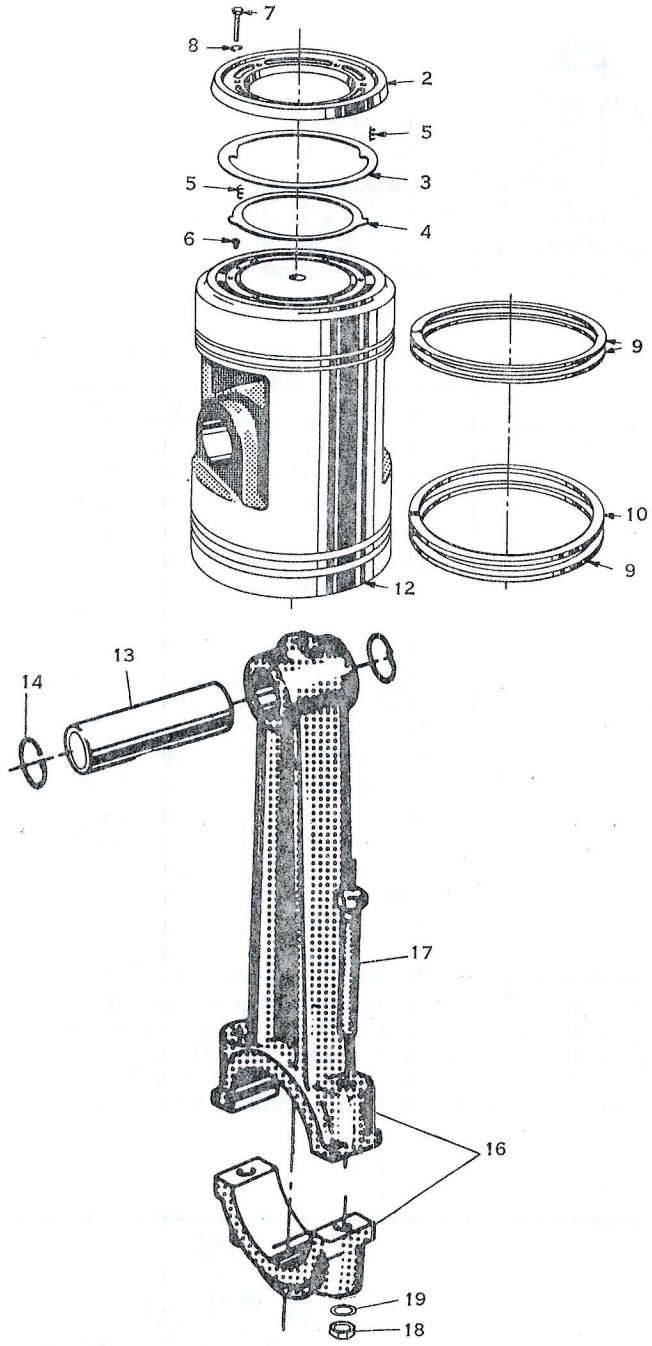

Item No.	Description	Part No.
1	Piston Assy. Compt. (Items 2-14)	
	Ammonia[1]	364-01462
	Halocarbon[2]	364-01463
2	Cage, Suction Valve - Ammonia[1]	064-01306
	- Halocarbon[2]	064-01307
3	Valve, Ring Plate Large	064-04100
4	Valve, Ring Plate Small	064-04099
5	Spring, Helical (10 Per Piston)	029-03903
6	Pin, Guide (2 Per Piston)	064-07119
7	Screw, Cap Hex Socket (6 Per Piston)	021-01376
8	Lockwasher, Spring Type (6 Per Piston)	021-01194
9	Compression Rings (3 Per Piston)	029-03810
10	Oil Cutter Ring	029-03753
12	Piston, Slipper Type	064-01301
13	Piston Pin	029-01509
14	Piston Locking Spring (2 Per Piston)	029-00275
15	Conn. Rod Assy. (Items 16-19)	364-01304
16	Conn. Rod	064-01304 -001
17	Bolt[3]	064-01309
18	Nut	021-10801
19	Washer	064-01310

[1] Identified by "A" on top of valve cage.
[2] Identified by "F" on top of valve cage.
[3] Tighten to 41.6 ft. lb. torque

FIG. 5— Piston, Suction Valve, and Connecting Rod

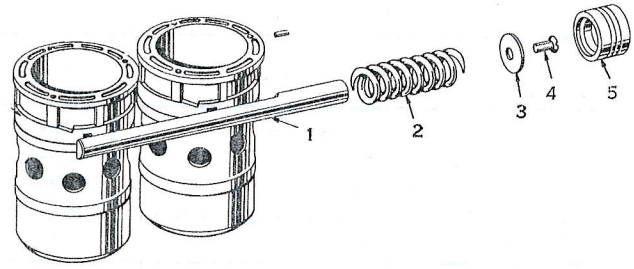

Item No.	Description	Part No.
1	Push Rod	364-01294
2	Spring	029-03875
3	Washer	064-01297
4	Screw	021-02001
5	Unloader Piston	064-01298

FIG. 6— Unloader Push Rod

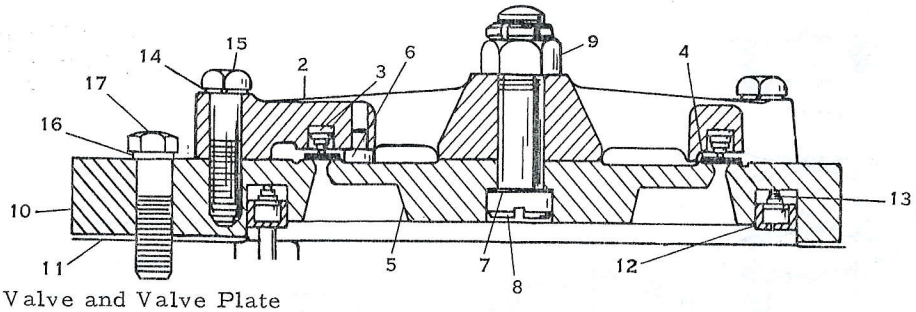

FIG. 7— Discharge Valve and Valve Plate

Item No.	Description	Part No.	
		Ammonia	Halocarbon
1	Discharge Valve Cage Assembly, (Items 2 - 9)	364-22514[1]	364-22513[2]
2*	Valve Cage	064-22489[1]	064-22488[2]
3	Spring, Conical (12 Per Cylinder)	029-00104	029-00104
4	Valve Ring	064-04100	064-04100
5*	Valve Seat	064-22469	064-22469
6*	Pin, Guide (2 Per Cylinder)	064-07119	064-07119
7	Gasket	070-05818	070-05818
8	Bolt	064-01322	064-01322
9	Nut, Self-Locking	021-09730	021-09730
10	Plate Valve - Non Unloading (Cyl. 3 & 4)	064-01313	064-01313
	Plate Valve - Unloading (Cyl. 1, 2, 5, 6, 7, 8)	064-01312	064-01312
11	Gasket, Valve Plate-Non-Unloading (Cyl. 3 & 4)	070-04792	070-04792
	Gasket, Valve Plate - Unloading (Cyl. 1,2,5,6,7,8)	070-04791	070-04791
12	Unloader Ring	064-01316	064-01316
13	Spring, Conical (8 Per Cylinder)	029-00104	029-00104
14	Lockwasher (5 Per Cylinder)	021-05270	021-05270
15	Cap Screw (5 Per Cylinder)	021-08426	021-08426
16	Lockwasher (9 Per Cylinder)	021-05249	021-05249
17	Cap Screw (9 Per Cylinder)	021-02815	021-02815

* Part numbers listed are for Discharge Valve Cage Assemblies with guide pins (6) pressed into Valve Cage (2). Compressors built prior to May 25, 1965 (Compressor numbers lower than 63 and Serial Number lower than RXO77540) have guide pins (6) pressed into inner valve seat (5). If any of items 2, 5 or 6 is to be replaced all items (2, 5 and 6) must be replaced. Recommendation would be to replace complete Discharge Valve Cage Assembly. See DESIGN HISTORY section of Service Instruction - Form 255.10-NM.

[1] Identified by "A" on top of valve cage - cage machined for .060" valve lift.
[2] Identified by "F" on top of valve cage - cage machined for .095" valve lift.

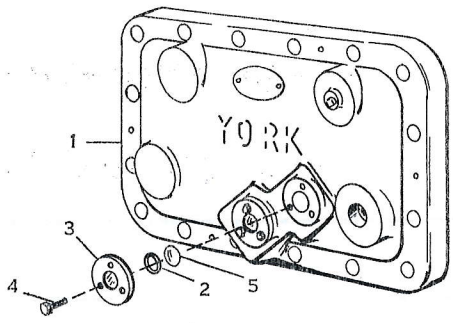

Item No.	Description	Part No.
1	Hand Hole Cover	064-01455
2	Gasket O-Ring	028-06791
3	Glass, Oil Sight	026-10797
4	Screw, Cap	021-01372
5	Reflector	064-25874

FIG. 8— Oil Sight Glass - Flat Type

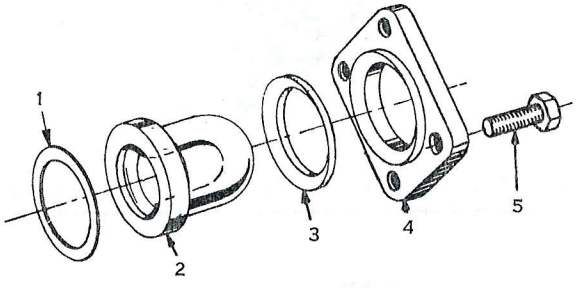

Item No.*	Description	Part No.
1	Gasket, Sight Glass	028-00778
2	Sight Glass	026-03992
3	Packing, Sight Glass	028-01519
4	Packing Gland, Sight Glass	064-00302
5	Cap Screw	021-01477

* Note: These items will not fit Hand Hole Cover listed in Fig. 8.

FIG. 9— Oil Sight Glass - Bulb Type

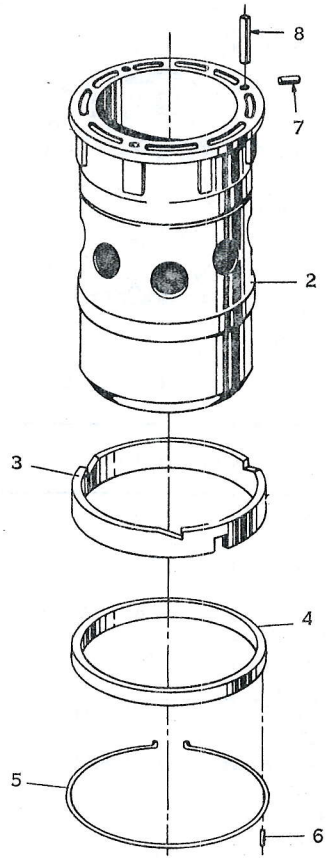

FIG. 10— Cylinder Sleeve Assembly

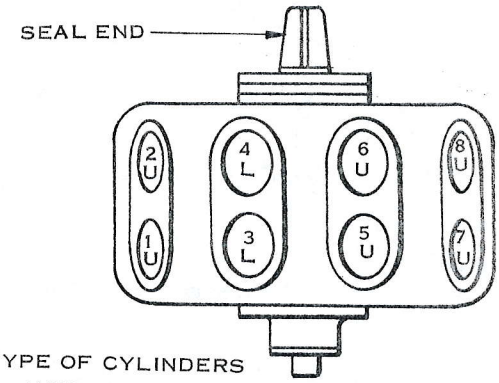

TYPE OF CYLINDERS
L = NON-UNLOADING
U = UNLOADING

Cylinder Numbering – Unloading and Non-unloading Type Cylinders

Item No.	Description	Part No.
1*	Cyl. Sleeve Assy. Compt. - Items 2-8 (R.H. Cyl. 1 & 2)	364-01292
	(L.H. Cyl. 5, 6, 7, 8)	364-01287
2	Cylinder Sleeve - Bare	029-03876
3*	Cam Ring (R.H. Cyl. 1 & 2)	064-01293
	Cam Ring (L.H. Cyl. 5, 6, 7, 8)	064-01288
4*	Cam Ring Support	064-01289
5*	Retaining Ring	029-11355
6*	Roll Pin (8 Per Cylinder)	029-03990
7*	Locating Pin	029-03991
8*	Lift Pin (3 Per Cylinder)	064-01311

* Not req'd. for non-unloading cylinders

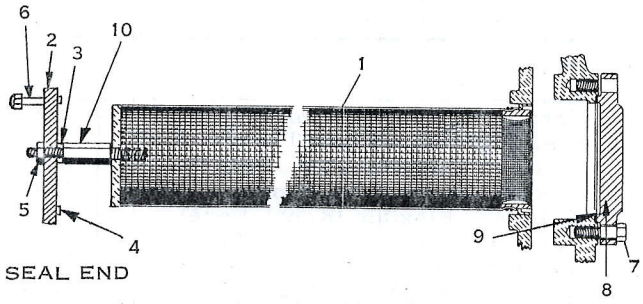

FIG. 11— Suction Strainer

Item No.	Description	Part No.
1	Screen	029-08598
2	Cover Plate	064-01325
3	Gasket, Stud	070-04778
4	Gasket, Cover Plate	028-00795
5	Nut, Hex	021-00482
6	Cap, Screw (6 Per Strainer)	021-01538
7	Cap, Screw (6 Per Strainer)	021-01628
8	Cover, Suction	064-01337
9	Gasket Suction	070-04779
10	Stud	064-12158
	Kit(Includes items 1,3,5,9,10)	364-30065

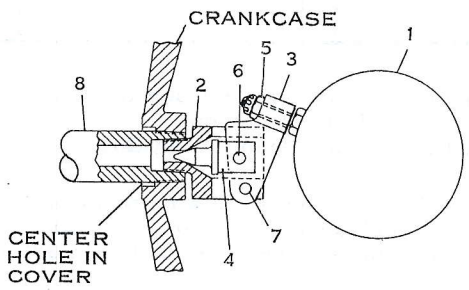

FIG. 12— Crankcase Float Valve

Item No.	Description	Part No.
	Float Valve Assembly (Items 1-8)	468-04540
1	Float Ball	022-00530
2	Valve Body	068-04541
3	Lever	068-04542
4	Valve	068-04545
5	Nut, Self-Locking	021-09610
6	Pin, Valve	068-01594
7	Pin, Lever	068-04544
8	Pipe Nipple, Special	070-14992

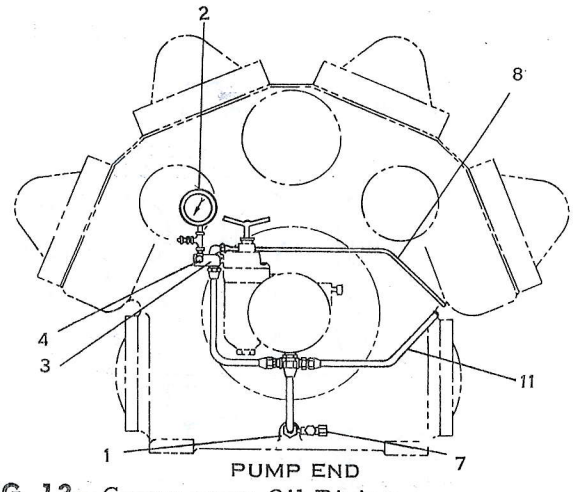

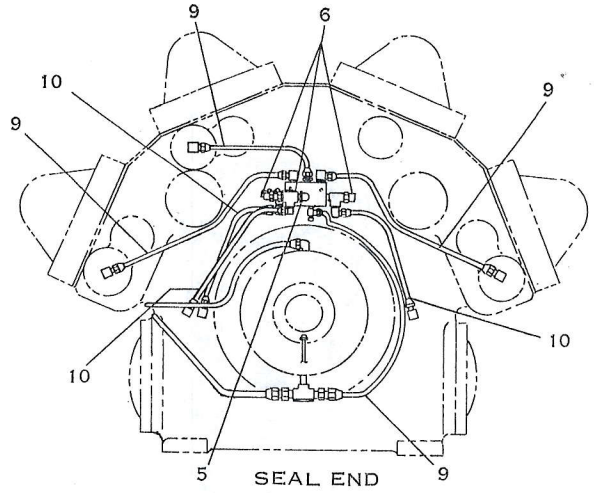

FIG. 13— Compressor Oil Piping

Item No.	Description	Part No.
1	Vortex Eliminator	364-22698
2	Oil Pressure Gauge (Ammonia)	026-03629
	Oil Pressure Gauge (Halocarbon)	026-06167
3	Oil Piping Header	064-01457
4	Oil Pressure Gauge Valve	368-00001
5	Unloader Header	364-01443
6	Manual Unloader Valve	368-00003
7	Oil Drain and Charging Valve	368-00003
8	Tube - 1/4 O.D. (By Foot)	003-00235
9	Tube - 3/8 O.D. (By Foot)	003-00240
10	Tube - 1/2 O.D. (By Foot)	003-00243
11	Tube - 5/8 O.D. (By Foot)	003-00810
	Tee, Screw 1/4"	023-04334
	Tee, Screw 1/2" x 3/8" x 3/8"	023-04369
	Tee, Screw 1/2" x 1/2" x 3/8"	023-04346
	Elbow, Flare, 1/4" SAE x 1/4" MPT, 90°	023-04729
	Elbow, Flare, 3/8" SAE x 1/4" MPT, 90°	023-01284
	Elbow, Flare, 3/8" SAE x 3/8" MPT, 90°	023-01289
	Elbow, Flare, 1/2" SAE x 3/8" MPT, 90°	023-01292
	Elbow, Flare, 5/8" SAE x 3/8" MPT, 90°	023-01294
	Elbow, Flare, 1/4" SAE x 1/8" MPT, 90°	023-01285
	Union, Flare, 3/8" SAE x 1/4" MPT	023-01308
	Union, Flare, 3/8" SAE x 3/8" MPT	023-01310
	Union, Flare, 5/8" SAE x 1/2" MPT	023-01315
	Union, Flare, 7/8" SAE x 3/4" MPT	023-01277
	Bonnett, Flare, 3/8"	023-01025
	Nut, Flare, 1/4"	021-05675
	Nut, Flare, 3/8"	021-05676
	Nut, Flare, 1/2"	021-05677
	Nut, Flare, 5/8"	021-05678

Accessory Tool Kit

Item No.	Description	Part No.
	Tool Kit Complete (Items 1-9)*	
	Ammonia NEMA Class 1	364-01563
	Ammonia NEMA Class 3, 7 & 9	364-12373
1	Funnel Ring	064-01456
2	Thermometer (Range 200° to 500° with mounting hardware)	026-03840
3	High Pressure Cutout	
	NEMA Class 1	025-04945
	NEMA Class 3, 7 & 9	025-10623
4	Socket Wrench (Relief Valve)	068-02949
5	Oil Pressure Safety Switch	
	NEMA Class 1	025-05782
	NEMA Class 3, 7 & 9	025-06100
6	Flare Union 1/4" SAE x 1/4" MPT	023-01306
7	Flare Nut - 1/4"	021-05675
8	Spanner Wrench (Shaft Seal)	064-03306
9	Spanner Wrench Handle	029-08012

* Shipped with each compressor

MISCELLANEOUS

Compressor, Replacement Ammonia	364-26430
Discharge Valve Cage Tool	364-28635
Suction Valve Clip (2-Req'd)	064-28630
Compressor Gasket (Compt. Set)	364-06367
Coupling, Flexible (Rough Bore)	029-04089
Flywheel (Direct Drive Units)	064-01764
[1]Cap Screw - 3/8" X 2" (8-Req'd)	021-11917
[1]Lockwasher 3/8" (8-Req'd)	021-05291
Belts ("C" Section-162" Nominal Inside Length - 1 set of 10 belts)	028-06931
Crankcase Heater (300 Watt)	
115 Volt	025-12700
230 Volt	025-09462
[2]Set Screw - 3/4" X 1"	021-00882

[1]Used to fasten Flexible Coupling to Flywheel-tighten to 35 ft. lb. torque.
[2]Used to fasten Flexible Coupling to Motor Shaft.

Note: Parts listed in this instruction are for Y-49 & Y-57 Series Compressor. For parts for earlier design compressors refer to Form 3W-D (Coded 453'

SUBJECT TO CHANGE WITHOUT NOTICE
PRINTED IN U.S.A.
PPC 500 380 .20
Form 255.10-RP
Code: S(N) & R(N)
S(N) - Int.

YORK
DIVISION OF BORG-WARNER CORPORATION
BORG WARNER
P.O. BOX 1592, YORK, PENNSYLVANIA 17405